Summary in Graph

Exam Summary (GATE Overflow CS Test Series 2026 | Mix Subjects | Test 2)

Qs. Attempted:	0 (0 + 0)	Correct Marks:	0 (0 + 0)
Correct Attempts:	0 (0 + 0)	Penalty Marks:	0 (0 + 0)
Incorrect Attempts:	0 (0 + 0)	Resultant Marks:	0 (0 + 0)

Total Questions:	30 (10 + 20)
Total Marks:	50 (10 + 40)
Exam Duration:	90 Minutes
Time Taken:	0 Minutes

Individual Question Statistics

Select Metric: Marks Obtained

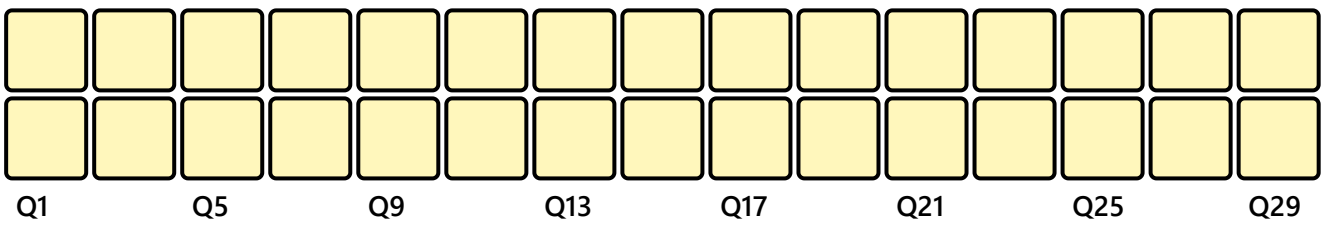

* Average Stats based on first-attempt stats of Top 10% (2) out of 20 users

EXAM RESPONSE | EXAM STATS | FEEDBACK

Technical

Q #1 | Multiple Choice Type | Award: 1 | Penalty: 0.33 | Digital Logic

A switch-tail ring counter is made using a single T flip flop. The resulting circuit is equivalent to:

A. SR flip flop
B. JK flip flop
C. T flip flop
D. None of the above

Your Answer: | Correct Answer: D | Not Attempted | Time taken: 00min 02sec | Discuss

Q #2 Numerical Type | Award: 1 | Penalty: 0 | Algorithms

Consider the following array of elements being sorted by merge sort. The sum of all the elements to which 13 gets compared is ____

$$14\ 13\ 24\ 56\ 87\ 98\ 4\ 65$$

Your Answer: | Correct Answer: 107 | Not Attempted | Time taken: 00min 00sec | Discuss

Q #3 Multiple Select Type | Award: 1 | Penalty: 0 | Algorithms

Which of the following is guaranteed to be a complete binary tree? (Mark all the appropriate choices)

A. A tree with every node having exactly zero or two children
B. A binary tree, which is completely filled, with the possible exception of the bottom level, which is filled from right to left
C. A binary tree, which is completely filled, with the possible exception of the bottom level, which is filled from left to right
D. A binary heap

Your Answer: | Correct Answer: C;D | Not Attempted | Time taken: 00min 00sec | Discuss

Q #4 Multiple Choice Type | Award: 1 | Penalty: 0.33 | Data Structures

What does the following piece of code do?

```
struct Tree
{
    int data;
    struct Tree* left;
    struct Tree* right;
};
void func(struct Tree* root)
{
    print("%d", root-> data);
    func(root-> left);
    func(root-> right);
}
```

A. Preorder traversal
B. Inorder traversal
C. Postorder traversal
D. Level order traversal

Your Answer: | Correct Answer: A | Not Attempted | Time taken: 00min 00sec | Discuss

Q #5 Multiple Choice Type | Award: 1 | Penalty: 0.33 | Algorithms

For the below function, arr is pointing to an array of len elements. The complexity of the function is

```
    void func(int * arr, int len)
    {
        if(len == 0)
            return;
5.      printf("%d ", arr[0]);
        func(arr+1, len-1);
    }
```

A. $O(n)$
B. $\Theta(n^2)$
C. $O(1)$
D. $\Theta(n \log n)$

Your Answer: | Correct Answer: A | Not Attempted | Time taken: 00min 00sec | Discuss

Q #6 Multiple Choice Type | Award: 1 | Penalty: 0.33 | Digital Logic

The following JK flip flop circuit is initially set and then clocked for 4 clock pulses. The output sequence will be _____

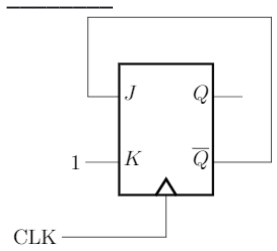

A. 0100
B. 1010
C. 0110
D. 0101

Your Answer: | Correct Answer: D | Not Attempted | Time taken: 00min 00sec | Discuss

Q #7 Numerical Type | Award: 1 | Penalty: 0 | Graph Theory

If a simple graph G has 10 vertices and 11 edges, the number of edges in the complement of G will be _____

Your Answer: | Correct Answer: 34 | Not Attempted | Time taken: 00min 00sec | Discuss

Q #8 Multiple Choice Type | Award: 1 | Penalty: 0.33 | Algorithms

What is the best case complexity in building a min-heap?

A. $\Theta(n \log n)$
B. $\Theta(n^2)$
C. $O(\log n)$
D. $O(n)$

Your Answer: | Correct Answer: D | Not Attempted | Time taken: 00min 00sec | Discuss

Q #9 Multiple Choice Type | Award: 1 | Penalty: 0.33 | Digital Logic

Which of the following gates are represented by the below two logic circuits?

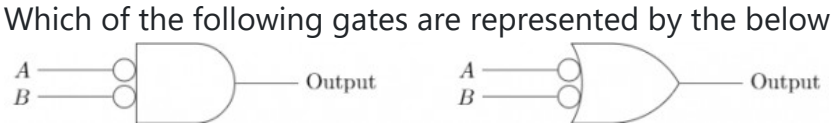

A. NAND, NOR
B. AND, OR
C. XOR, XNOR
D. NOR, NAND

Your Answer: | Correct Answer: D | Not Attempted | Time taken: 00min 00sec | Discuss

Q #10 | Multiple Select Type | Award: 1 | Penalty: 0 | Digital Logic

Which of the following statements is/are TRUE? (Mark all the appropriate choices)

A. The XOR function is the mathematical equivalent of binary addition
B. The AND function is the mathematical equivalent of binary multiplication
C. The AND function is the mathematical equivalent of binary addition
D. The OR function is the mathematical equivalent of binary addition

Your Answer: | Correct Answer: A;B | Not Attempted | Time taken: 00min 00sec | Discuss

Q #11 | Numerical Type | Award: 2 | Penalty: 0 | Algorithms

For the input $A = 11$ and $B = 10$, the value of $F_1 \oplus F_2 \oplus F_3 =$ ($\oplus$ being the XOR operations)

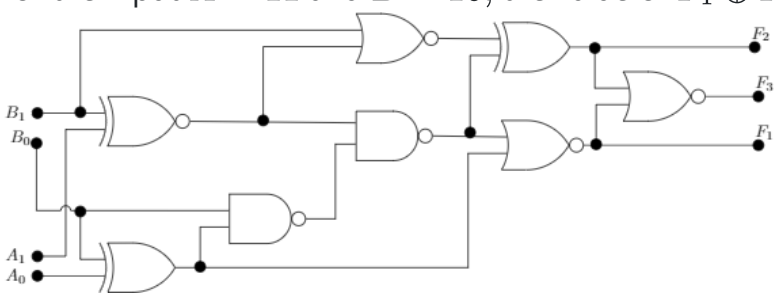

Your Answer: | Correct Answer: 1 | Not Attempted | Time taken: 00min 00sec | Discuss

Q #12 | Numerical Type | Award: 2 | Penalty: 0 | Programming in C

If the values printed by the following C code are a and b, $a + b =$ ____

```
#include<stdio.h>
int main()
{
    int array[5] = {1, 2, 3, 4, 5};
    int *p = array;
    printf("%ld\t%ld", p - array, p - (int*)&array);
}
```

Your Answer: | Correct Answer: 0 | Not Attempted | Time taken: 00min 00sec | Discuss

Q #13 | Numerical Type | Award: 2 | Penalty: 0 | Programming in C

What will be the output of the following C code?

```
#include<stdio.h>
int main()
{
    int array[4] = {1, 2, 3, 4};
5.  printf("%d\n", *array + array[0]
        + *array+1 + array[array[1]]);
}
```

Your Answer: | Correct Answer: 7 | Not Attempted | Time taken: 00min 00sec | Discuss

Q #14 Numerical Type | Award: 2 | Penalty: 0 | Digital Logic

In most cases, the product of two $n-bit$ two's-complement numbers requires fewer than $2n$ bits. In fact, there is only one case in which $2n$ bits are needed. For $n=4$, let this happen for the product of p and q. Then, $p \times q =$ ____

Your Answer: | Correct Answer: 64 | Not Attempted | Time taken: 00min 00sec | Discuss

Q #15 Numerical Type | Award: 2 | Penalty: 0 | Digital Logic

There are $2^{2^3} = 256$ boolean functions of three variables. How many of these 3-input Boolean functions depend on all three variables?

Your Answer: | Correct Answer: 208 | Not Attempted | Time taken: 00min 00sec | Discuss

Q #16 Numerical Type | Award: 2 | Penalty: 0 | Digital Logic

How many cascaded mod-8 counters are required to divide a clock frequency by 32768?

Your Answer: | Correct Answer: 5 | Not Attempted | Time taken: 00min 00sec | Discuss

Q #17 Multiple Choice Type | Award: 2 | Penalty: 0.67 | Digital Logic

In an SR latch made by cross-coupling two NOR gates, both S and R inputs are set to 1, and then both are again set to 0 after the output is stabilized. This will result in the output

A. No change
B. $Q=1, Q'=0$
C. $Q=0, Q'=1$
D. Indeterminate state

Your Answer: | Correct Answer: D | Not Attempted | Time taken: 00min 00sec | Discuss

Q #18 Numerical Type | Award: 2 | Penalty: 0 | Digital Logic

A Mod-10 ripple counter is cascaded with Mod-15 ripple counter. The resulting counter is a Mod-M counter with N flip-flops. The value of $2*M+3*N$ is ____

Your Answer: | Correct Answer: 324 | Not Attempted | Time taken: 00min 00sec | Discuss

Q #19 Multiple Choice Type | Award: 2 | Penalty: 0.67 | Digital Logic

In the sequential circuit shown below, if the initial value of the output Q_1Q_0 is 11, what are the next four values of Q_1Q_0?

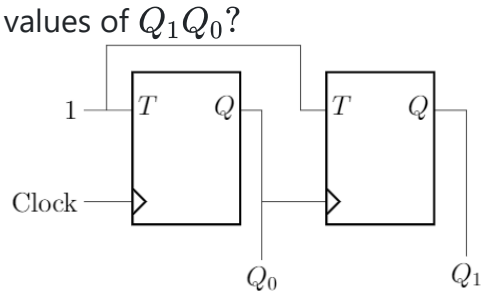

A. $11, 01, 10, 00$
B. $10, 11, 01, 00$
C. $10, 00, 01, 11$
D. $11, 10, 01, 00$

Your Answer: | Correct Answer: D | Not Attempted | Time taken: 00min 00sec | Discuss

Q #20 Numerical Type | Award: 2 | Penalty: 0 | Digital Logic

The number of clock pulses needed to change the contents of a $6-$bit up counter from 100101 to 000101 is ____

Your Answer: | Correct Answer: 32 | Not Attempted | Time taken: 00min 00sec | Discuss

Q #21 Multiple Choice Type | Award: 2 | Penalty: 0.67 | Digital Logic

Consider a 4 bit Johnson counter with an initial decimal value of 1. The counting sequence of this counter is:

A. $1, 3, 15, 14, 12, 8, 7, 0$
B. $1, 3, 5, 7, 9, 11, 13, 15$
C. $1, 0, 8, 12, 14, 15, 7, 3$
D. $1, 7, 3, 0, 8, 12, 14, 15$

Your Answer: | Correct Answer: C | Not Attempted | Time taken: 00min 00sec | Discuss

Q #22 Numerical Type | Award: 2 | Penalty: 0 | Digital Logic

The minimum number of 2-to-4 line decoders with an enable input needed to construct a 4-to-16 line decoder without using any other logic gates is ____

Your Answer: | Correct Answer: 5 | Not Attempted | Time taken: 00min 00sec | Discuss

Q #23 Numerical Type | Award: 2 | Penalty: 0 | Digital Logic

If the minimum number of two-input NAND gates required to design a 1-bit full adder is denoted by M and the minimum number of two-input NOR gates required for the same is denoted by N, then $M + N =$ _____

Your Answer: | Correct Answer: 18 | Not Attempted | Time taken: 00min 00sec | Discuss

Q #24 | Multiple Choice Type | Award: 2 | Penalty: 0.67 | Digital Logic

The following circuit implements a two-input OR gate using two 2-1 multiplexers.

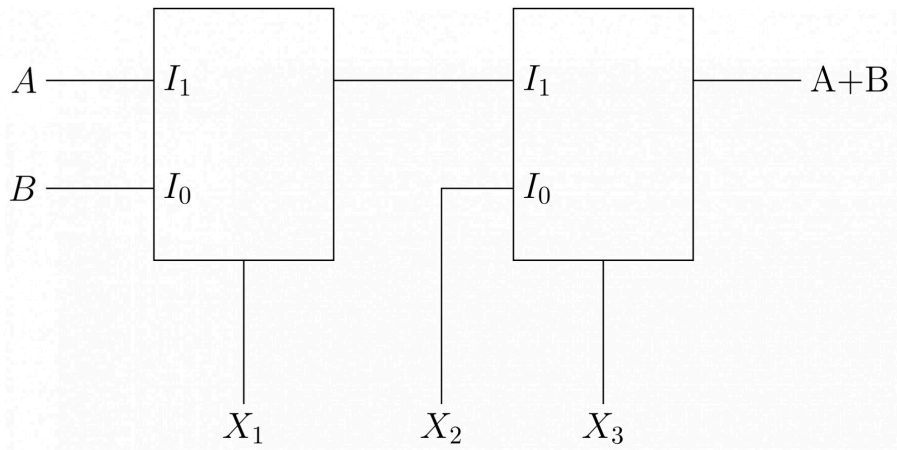

What are the values of X_1, X_2 and X_3?

A. $X_1 = B, X_2 = 1, X_3 = 1$
B. $X_1 = A, X_2 = 0, X_3 = A$
C. $X_1 = A, X_2 = B, X_3 = 1$
D. $X_1 = B, X_2 = 0, X_3 = 0$

Your Answer: | Correct Answer: C | Not Attempted | Time taken: 00min 00sec | Discuss

Q #25 | Numerical Type | Award: 2 | Penalty: 0 | Data Structures

The number of distinct binary search trees of maximum height 3 (counted from 0) possible with 5 elements is _____

Your Answer: | Correct Answer: 26 | Not Attempted | Time taken: 00min 00sec | Discuss

Q #26 | Numerical Type | Award: 2 | Penalty: 0 | Data Structures

The number of distinct binary trees possible with 6 elements with just one element being repeated is _____

Your Answer: | Correct Answer: 47520 | Not Attempted | Time taken: 00min 00sec | Discuss

Q #27 | Multiple Select Type | Award: 2 | Penalty: 0 | Digital Logic

Which of the following is/are TRUE regarding IEEE-754 representation? (Mark all the appropriate choices)

A. IEEE-754 single precision representation allows only normalized numbers
B. The range of numbers representable by IEEE-754 double precision representation is double that of IEEE-754 single precision representation
C. IEEE-754 double precision representation allows precise representation of any 32 bit integer value
D. IEEE-754 representation has multiple representations possible for 0

Your Answer: | Correct Answer: C;D | Not Attempted | Time taken: 00min 00sec | Discuss

Q #28 Numerical Type | Award: 2 | Penalty: 0 | CO & Architecture

A device with transfer rate of 25 KB/sec is connected to a CPU. Data is transferred byte-wise and the interrupt overhead is 12 microseconds. The byte transfer time between the device interface register and CPU or memory is negligible. What is the minimum performance gain of operating device under interrupt driven mode over operating it under program-controlled mode?

Your Answer: | Correct Answer: 3.3:3.4 | Not Attempted | Time taken: 00min 00sec | Discuss

Q #29 Numerical Type | Award: 2 | Penalty: 0 | CO & Architecture

Consider a 5 stage MIPS Pipeline with the following features:

- For a non-pipeline implementation, ALU operations and branches take 3 cycles while memory operations take 5 cycles and clock rate is 3 GHz
- Relative frequencies of ALU operations, branches and memory operations are $55\%, 15\%$ and 30%.
- In the pipeline due to clock skew and setup time, the clock cycle time increases by 0.65 ns.

Calculate the estimated speedup (rounded to 2 decimal points).

Your Answer: | Correct Answer: 1.22 : 1.23 | Not Attempted | Time taken: 00min 00sec | Discuss

Q #30 Numerical Type | Award: 2 | Penalty: 0 | CO & Architecture

We have a RISC processor with register-register arithmetic instructions that have the format $R_1 \leftarrow R_2 \; op \; R_3$. The pipeline of these instructions runs with a 3 GHz clock with the following stages: Instruction fetch $= 1$ clock, instruction decode $= 2$ clocks, fetch operands $= 1$ clock, execute $= 3$ clocks and store results $= 2$ clocks. What rate(in MIPS) can we execute register-register instructions that have no data dependencies with other instructions?

Your Answer: | Correct Answer: 1000 | Not Attempted | Time taken: 00min 00sec | Discuss

Copyright & Stuff